成均館大學校
SUNG KYUN KWAN UNIVERSITY

Unique Origin
Unique Future

TUP23

Development of magnetic field instrumentation for compact cyclotron

Ho Namgoong, Donghyup Ha, Hyojeong Choi, Sangchul Mun, Woojung Jun, Mitra Ghergherehchi J.S. Chai*,
College of Information & Communication Engineering, Sungkyunkwan University, Suwon, KOREA
Huisu Kim, Jongchul Lee, Department of Energy Science, Sungkyunkwan University, Suwon, KOREA

21st International Conference on Cyclotrons and their Applications, Sep 11-16, Zürich, Swiss

Abstract

To produce a radio isotope for Positron Emission Tomography (PET), 10 MeV compact Cyclotron was installed at Sungkyunkwan University. This cyclotron had been produced 10 MeV proton beam. For this cyclotron magnet, the magnetic field measurement instrument was being developed. The hall probe sensor was used for field measurement. This hall probe sensor moves radial direction and angular direction by mechanically. The Magnetic field measurement system measures the field in the range of 5 mm for radial direction and 1 degree for angular direction. Magnetic field was measured with and without cooling. Magnetic field was carried with 4 Gauss without cooling and 0.1 Gauss with cooling. Our developed magnetic field measurement instrument has 0.1 Gauss of an error and 0.01 Gauss of resolution over 9 hours.

Field measurement instrumentation

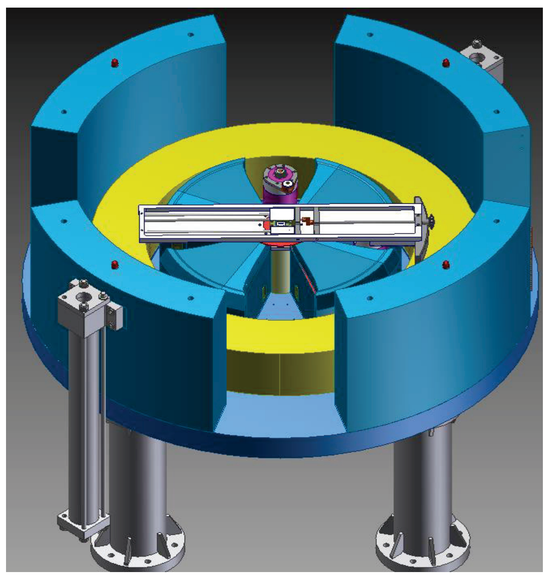

Fig 1. 3D Model of field measurement instrument

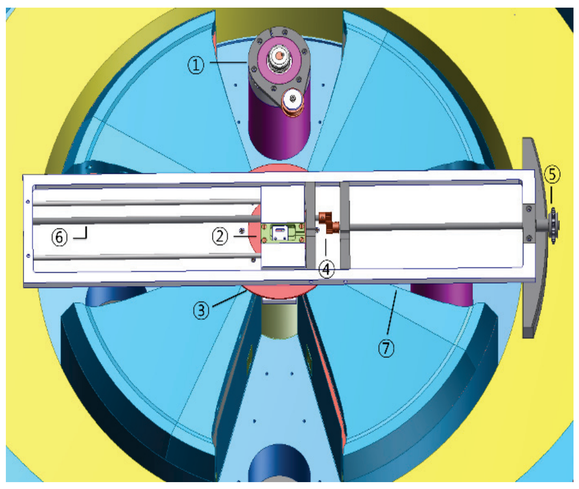

Fig 2. Structure of field measurement system

- **Three-dimensional mechanical design of measurement system**
- **The hall sensor probe on the center of jig (②) will rotate between the mid-plane of magnet**
- **The gear (⑤) on the side of rotation jig (⑦) will move the hall sensor probe along R-axis**
- **The step motor (①) installed at valley, step motor is connected with rotation jig using by tension belt**

Field measurement program

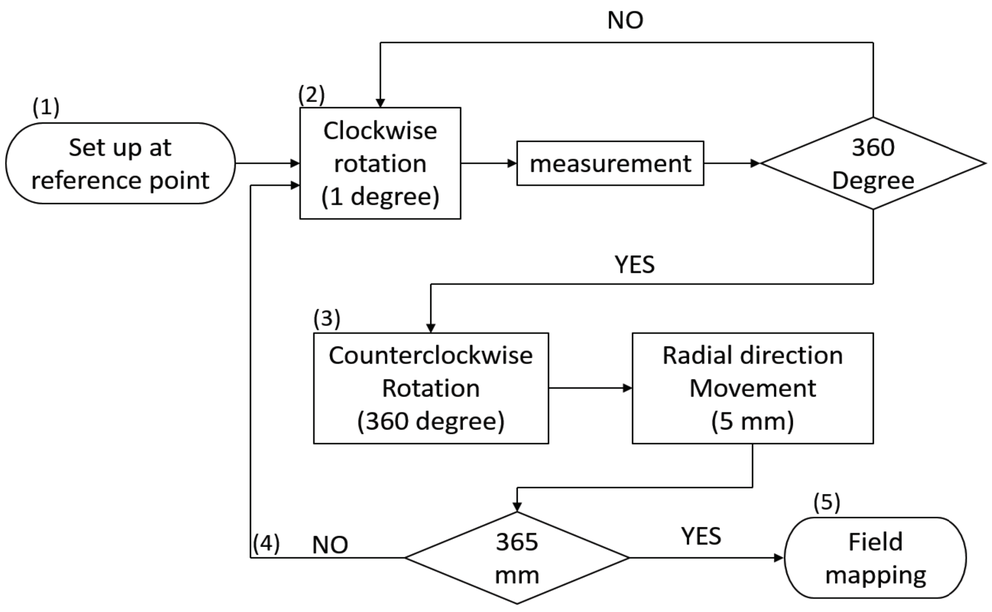

Fig 3. Flow chart of field measurement program

- **Field measurement program based on LABVIEW**
- **Measurement process was described in the following steps.**

  (1) Measurement start at reference point.

  (2) Magnetic field measure with same angular step at same radius.

  (3) The hall probe sensor moves radial direction. (5 mm)

  (4) & (5) Full field mapping by repeating the procedure (2) and (3)

Measurement result

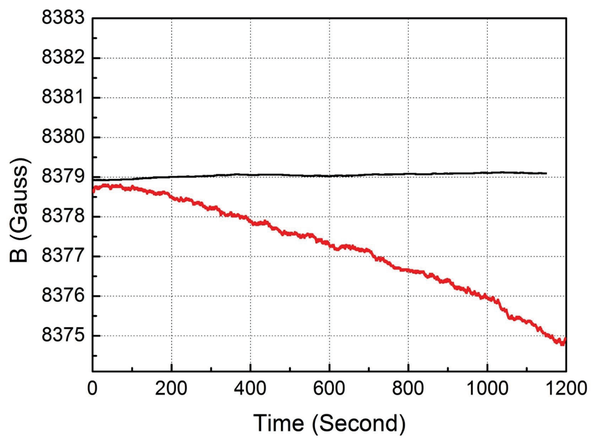

Fig 4. Magnetic field variation

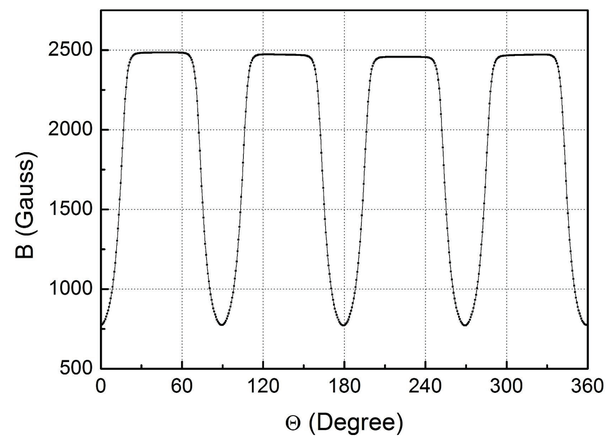

Fig 5. Magnetic field measurement

- **Temperature of electromagnet was increase to 50 degree without cooling.**
- **The magnetic field had been reduced about 4 Gauss in 20 minutes and temperature had risen when the field was measured in a fixed point.**
- **When the temperature was constant, magnetic field value was constant also**
- **Magnetic field measurement results was constant at a stable condition.**

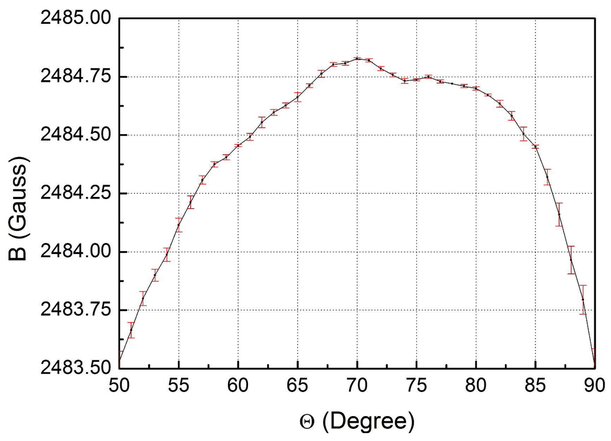

Fig 6. Error bar of measurement

Parameters	Values
Radial step range	1 ~ 15 mm
Radial measurement resolution	5 mm
Angular step range	0.07 ~ 360 Degree
Angular measurement resolution	1 Degree
Sampling number	5
Field measurement range	0 T ~ 3 T
Field measurement Resolution	0.01 Gauss
Measurement Time	9 hour
Magnetic field error	0.1 Gauss

Table 1. Result of magnetic field measurement

- **The error of magnetic field measurement was around 0.1 Gauss**
- **The error of magnetic field measurement had been produced by the three main errors caused by the mechanical operation, unstability of the sensor, the effect of the temperature**
- **The hall probe sensor takes 5 data each measurement step for increase accuracy of measurement**
- **Measurement resolution was set as 5 mm and 1 degree. It is enough to get full 2-d map of magnetic field.**
- **This magnetic field measurement instrumentation is utilized for full field mapping for 10 MeV cyclotron**

Conclusion

In this study, Magnetic field measurement instrument for compact cyclotron has been developed. Magnetic field measurement system measures the field in the range of 5 mm for radial direction and 1 degree for angular direction. The range is adjustable in the program code. Magnetic field measurement system can monitor the field intensity synchronously. This magnetic field measurement instrument was adopted simple structure and magnetic field measurement error was less than 0.1 Gauss. It is utilized for full field mapping of electromagnet with high accuracy.

* Corresponding Author: jschai@skku.edu

IT Accelerator Engineering Research Center
ITAEC
SKKU

CYC2016